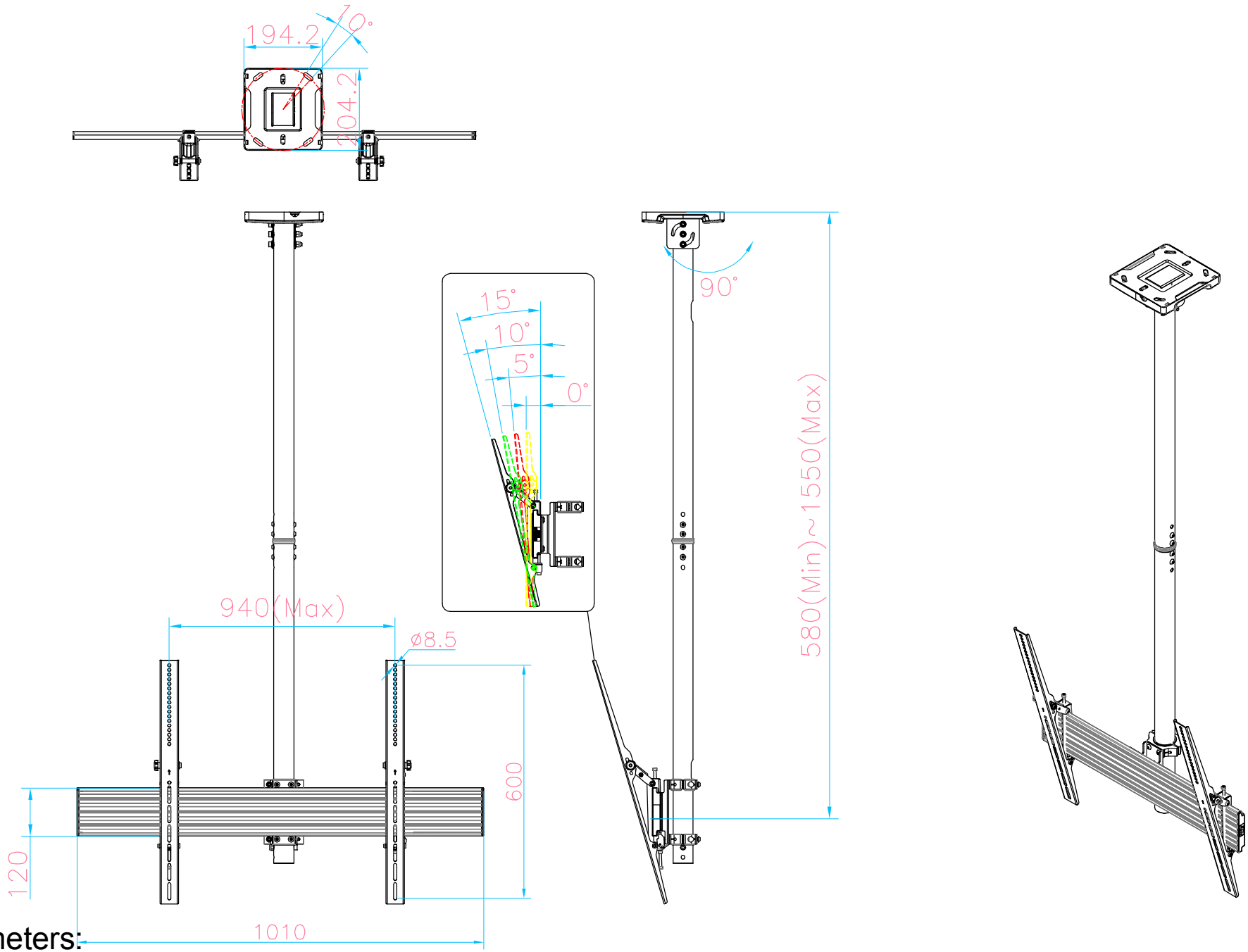

- Parameters:
- Max Load Capacity: 72.7kg
- VESA Standard: 900*600(Max).
- Swivel:90°;Tilt:15°