| REVISIONS | | |
|---|---|---|
| ISS | ZONE | DESCRIPTION\PER REQUEST\DATE |
| | | |
| V | OPEN | Open drawings to customers |
| | | |
| | | |

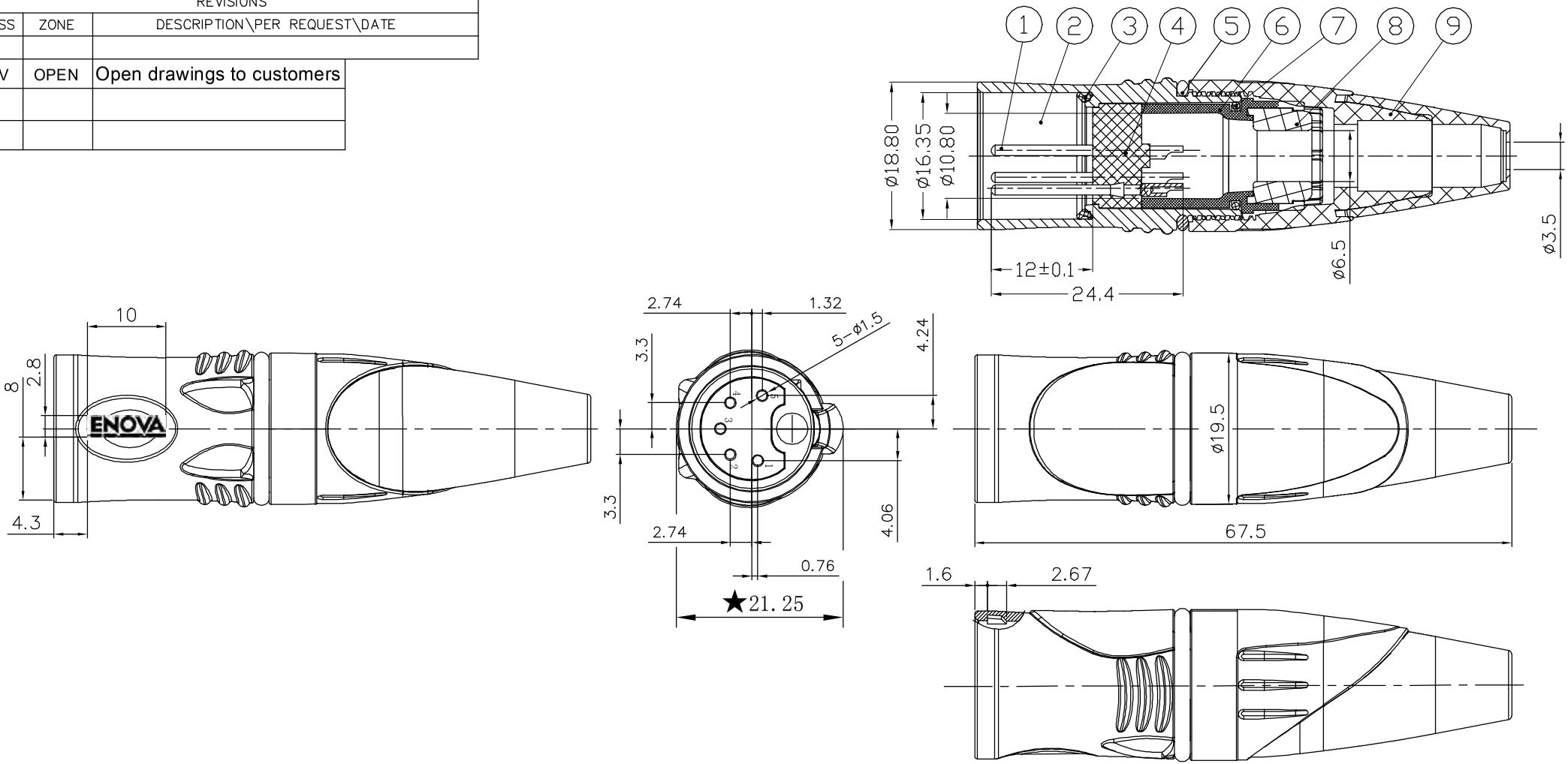


| NO. | DESCRIPTION | MATERIAL | FINISH | Q'TY | DRAWING NO. |
|---|---|---|---|---|---|
| 9 | CAP+BOOT | PA6+TPR | BK+OR | 1 | |
| 8 | WATERPROOF | NBR | BLACK | 1 | |
| 7 | O-WASHER | NBR | BLACK | 1 | |
| 6 | CABLE CLAMP | PA6 | WHITE | 1 | |
| 5 | O-WASHER | SILICON | BLACK | 1 | |
| 4 | O-WASHER | SILICON | ORANGE | 1 | |
| 3 | INSULATOR | PA | BLACK | 1 | |
| 2 | PIN | H59-1 | SILVER | 5 | |
| 1 | DIE-CAST SHELL | ZZnAL4-1 | Electro-coating black | 1 | |

DIMENSIONS ARE IN MILLIMETERS
UNLESS OTHERWISE SPECIFIED TOLERANCES
ANGLES = ±5°
UP TO 6 = ±0.2
6–40 = ±0.4
40–120 = ±0.6
120–315 = ±1
ABOVE 315 = ±1.6

THIRD_ANGLE
SCALE 1.5/1

APPROVED DATE
CHECKED DATE
DRAWN HAONANHU DATE 2019-8-20
FILE NO.
ERP LINK:

# Connector Distribution GmbH

TITLE
WATERPROOF 5P XLR MALE CONNECTOR
PLATED SILVER PIN

PART NO. XL25MB-W
REV. A1